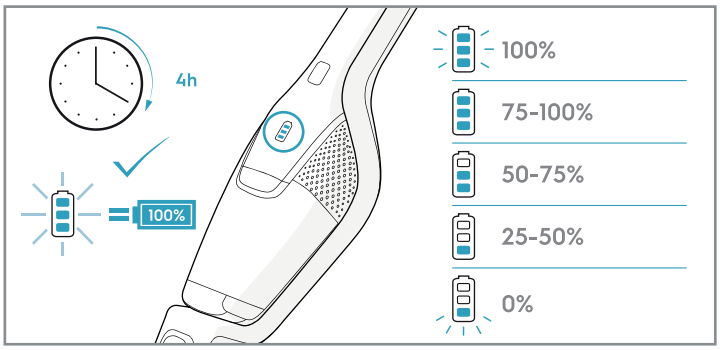

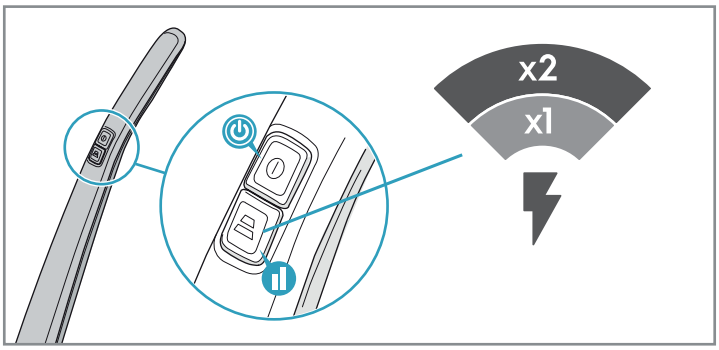

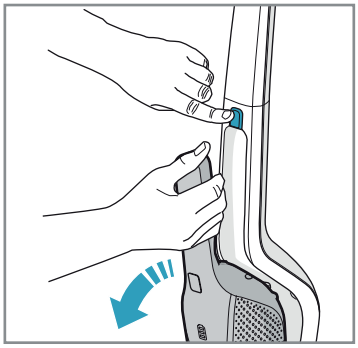

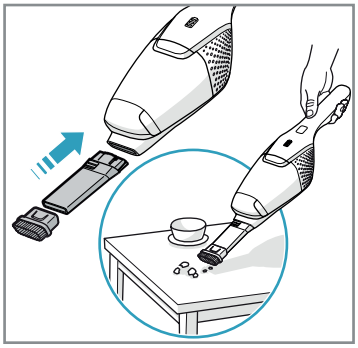

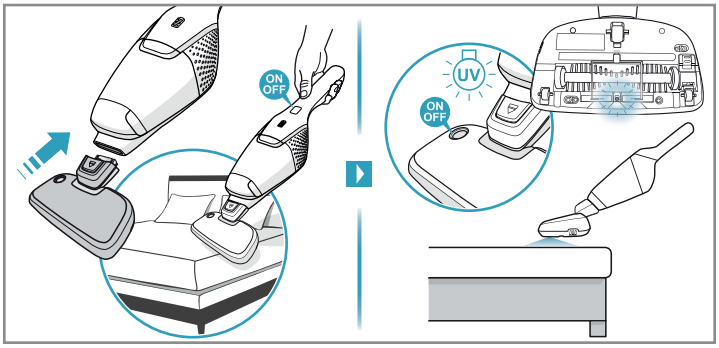

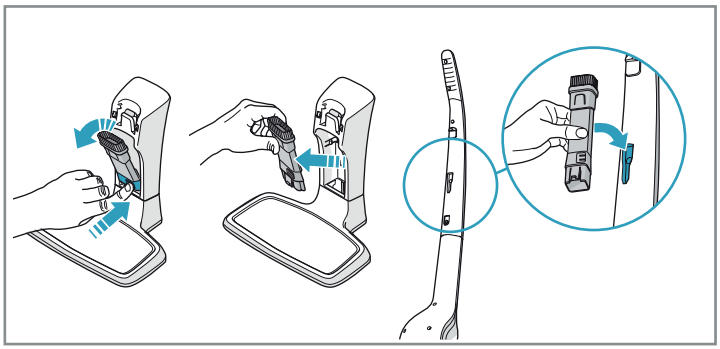

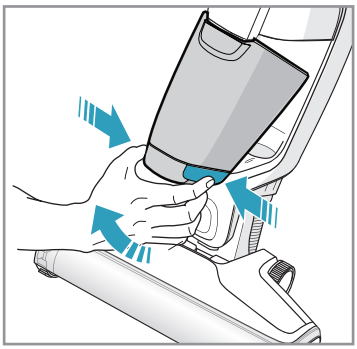

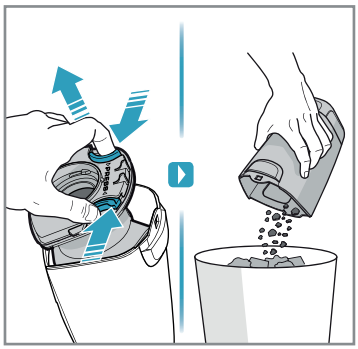

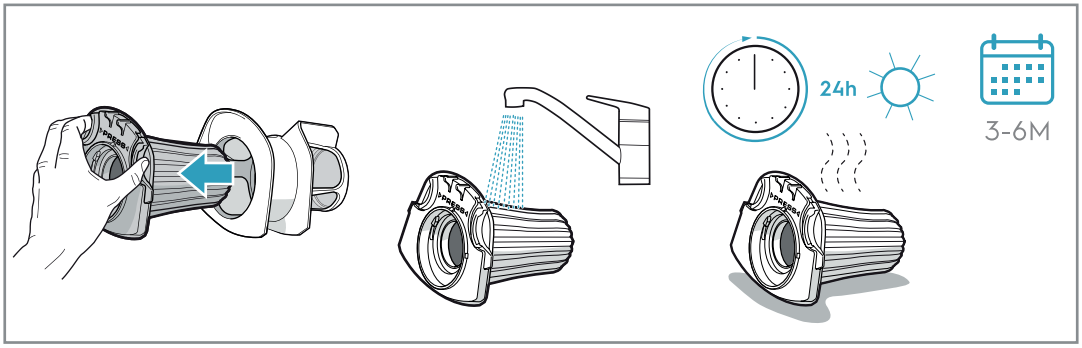

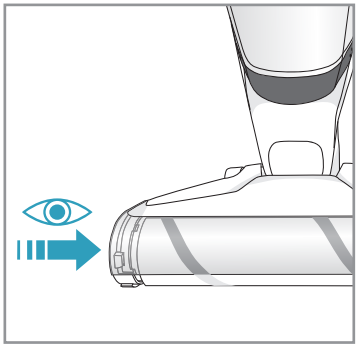

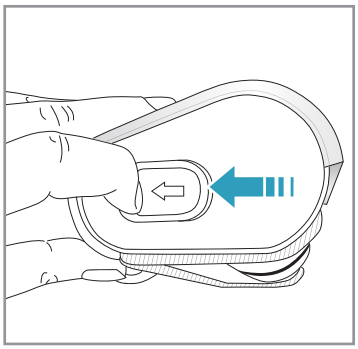

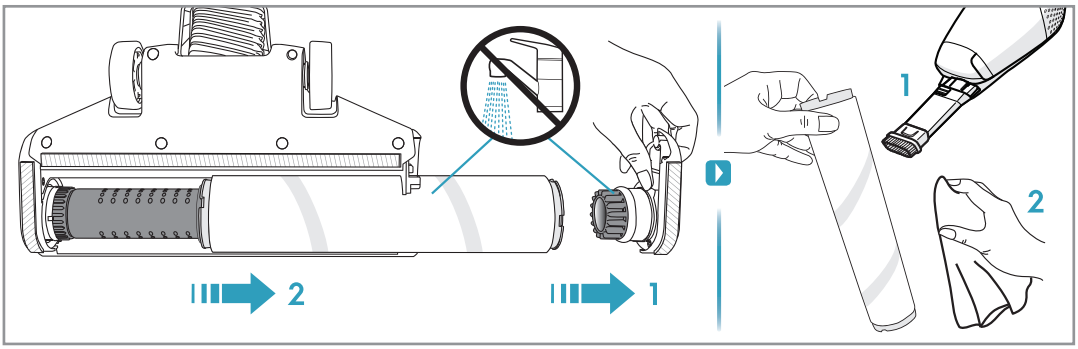

Car Kit
KIT 360+
PNC: 900 168 3409

Allergy Kit
KIT 15
PNC: 900 168 9190

Filter
EF 150
PNC: 900 168 3748

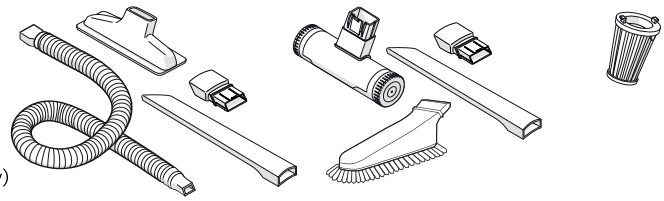

General: www.electrolux.com
Australia: shop.electrolux.com.au
中国大陆微信公众号：伊莱克斯小家电体验中心
Korea: www.electroluxshop.co.kr
New Zealand: www.electroluxvacuums.co.nz/parts-and-service/all-parts
(Availability of consumables and accessories varies by region and country)

DEPDAG : I.31.EI6.00334.0119

APCHI02

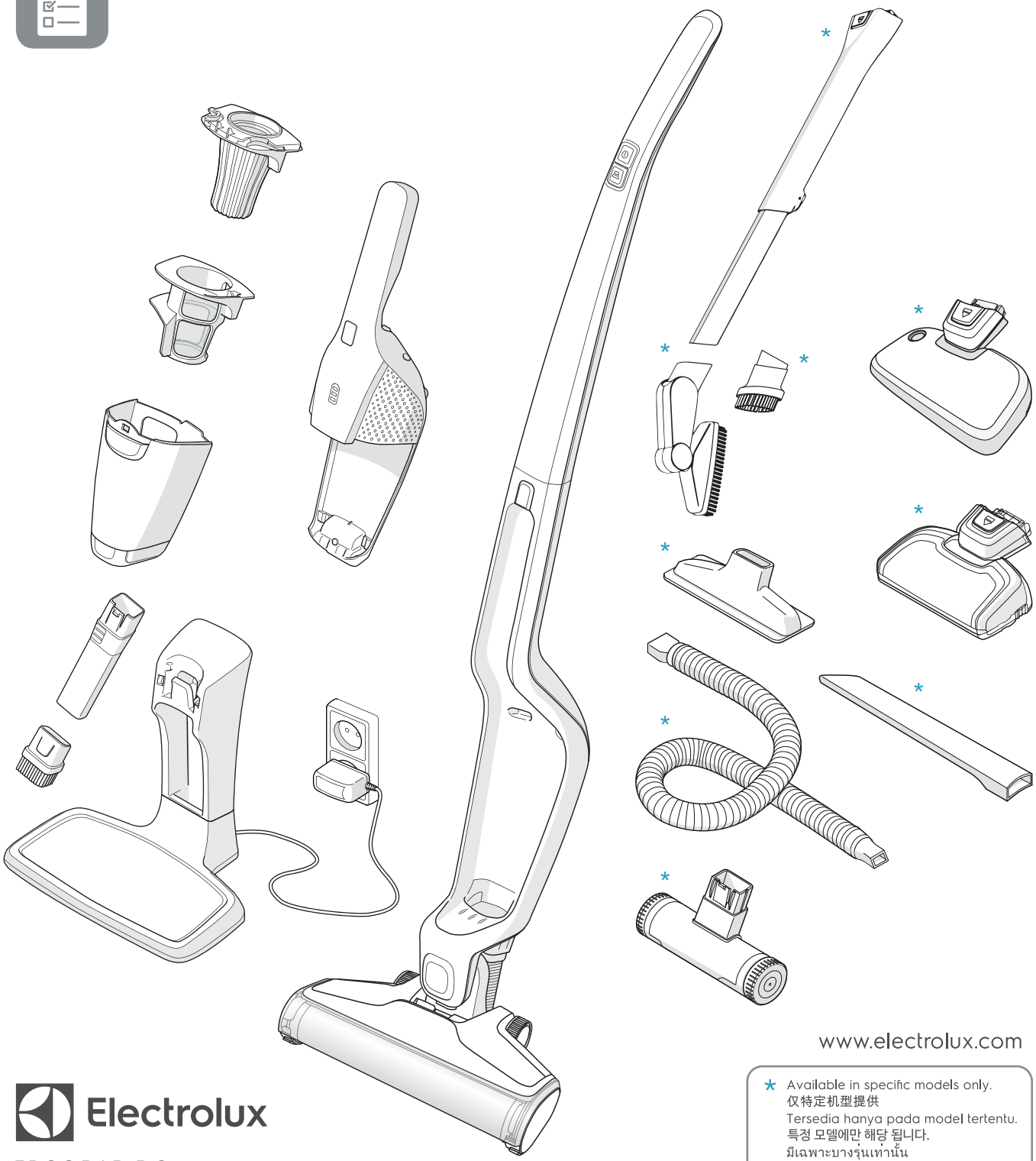

www.electrolux.com

* Available in specific models only.
仅特定机型提供
Tersedia hanya pada model tertentu.
특정 모델에만 해당 됩니다.
มีเฉพาะบางรุ่นเท่านั้น
只適用於指定型號
Chỉ có ở một số kiểu máy nhất định.

Electrolux

ERGO**RAPIDO** POWER PRO

Cordless vacuum cleaner
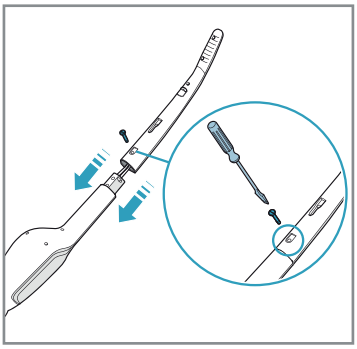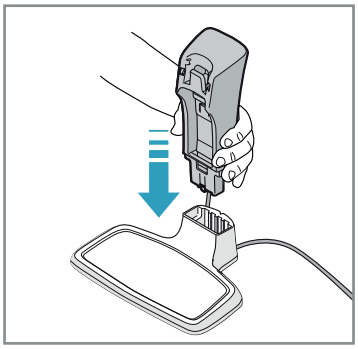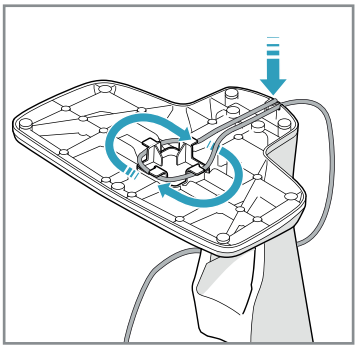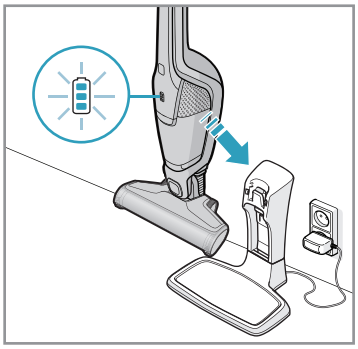
ZB3411, ZB3423BO, ZB3414AK, ZB3423B, ZB3424BP, ZB3424BL, ZB3426BL, ZB3425BL